Saramonic

Sound.Remarkable.

Super-cardioid Shotgun Microphone

超心型枪式麦克风

Vmic5 Pro

User Manual

用户手册

Product Introduction

The Saramonic Vmic5 Pro is a super-cardioid on-camera condenser shotgun microphone that provides broadcast-quality audio to DSLR, Mirrorless and Video Cameras. The Vmic5 Pro features aoutput level control (-10dB, 0dB, +20dB), a high-pass filter (0/75/150Hz) and a high frequency boost (+5db) to increase intelligibility of dialogue. The microphone features Auto Power function, allowing to turns on/off in response to the plug-in power status.

The detachable 3.5mm cable connects the Vmic5 Pro to your camera's audio input and the headphone output allows you to monitor the incoming audio. Specially designed shock mount system provide isolation from vibration and mechanical noise. Built-in battery has a capacity of 2000mAh that allows to be charged via USB-C (DC 5V/1A). Includes foam windshield, fur windscreen, USB-C charging cable, 3.5mm TRS audio cable in the package.

Highlights

- Super-cardioid polar pattern
- Automatic Power On/Off
- Shock mount system for reducing mechanism noise
- High-pass filter (flat/150 Hz)
- Three-level output control (-10dB, 0dB, +20dB)
- High-frequency boost (5db)
- Powered by built-in battery or USB-C (DC 5V/1A)
- Includes foam windshield, fur windscreen, USB-C charging cable, 3.5mm TRS to TRS audio output cable for camera

Product Structure

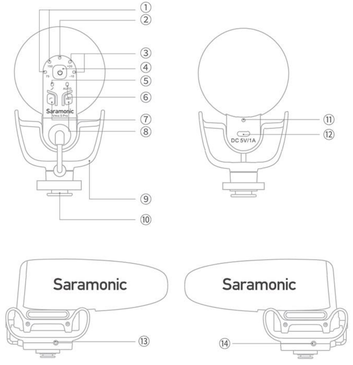

① **High-pass Filter LED (flat, 75, 150Hz)**
NOTE: The indicator lights off when turns into flat.

② **Power LED**
Power ON=Solid Blue Light

③ **Output Gain Control LED (-10dB, 0dB, +20dB)**
The indicator lights off when turns into 0dB.
Low Battery=Solid Red Light

④ **Power Button**

⑤ **High-pass Filter Button**

⑥ **Auto Power LED**

⑦ **High-pass Filter Button**
Short press to adjust low-cut setting.
Long press to turn on high-frequency boost function.

⑧ **Output Gain Level Button**
Short press to adjust output gain level setting.
Long press to turn on POWER AUTO function.

⑨ **Shock Mount System**

⑩ **Cold Shoe Mount**

⑪ **Charging Status LED**
Charging=Solid Red Light
Fully Charged=Solid Blue Light

⑫ **USB-C Charging Port (DC 5V/1A)**

⑬ **3.5mm Headphone Output**

⑭ **LINE OUT Port**

Set Up Guide

1. Long press the power button turning on the microphone, and then the Power LED lights blue.
2. Unscrew the locking screw of the microphone, and slide it onto DSLR or others.
3. Tighten the screw again to fix it on the position.
4. Attach the Vmic5 Pro to your camera's shoe mount. Connect the Vmic5 Pro's microphone output to the microphone input of the camera using the supplied 3.5mm audio output cable.
5. Adjust the microphone's level control according to your needs. The 0dB is appropriate for most scenarios, +20dB lets you to turn down your camera's preamp in order to achieve a clean sound or for picking up subjects from further away in noisy environments.
6. If your camera lacks a headphone jack for direct monitoring, plug headphones into the headphone output jack to monitor the audio. We also suggest to recording a sample take and playing back to check if the audio level it is acceptable before recording.
7. Wearing the foam windshield in outdoors can reject wind noise and record a clear sound.
8. Turn the switch to OFF position after recording finished.

Charging

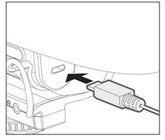

Use the supplied cable to plug into the USB-C charging cable (DC 5V/1A)

Charging=Solid Red Light

Fully Charged=Solid Blue Light

Specification

Acoustic Principle	Condenser
Polar Pattern	Super-cardioid
Frequency Response	20–20,000Hz
Sensitivity	-14±3dB(0dB=1V/Pa@1KHz)
Signal-to-Noise Ratio	85dB
Output Impedance	200Ω
Gain	-10dB, 0dB, +20dB
High-pass Filter	0Hz, 75Hz, 150Hz
Maximum Output Level	7.5dBu(@1kHz,1%THD into 1kΩ)
Output	3.5
SPL	130dBu
Power Consumption	3.7V/2000mAh(Built-in Battery)
Battery Life	120hrs
Other Functions	High-frequency Boost, Auto Power
Size	185*109*66mm (7.3*4.3*2.6'')
Weight	185.5g (6.5 oz.)

Scan the QR code and follow us!
扫描微信关注枫笛公众号

Shenzhen Jiayz Photo Industrial., Ltd
深圳市长丰影像器材有限公司

A16 Building, Intelligent Terminal Industrial Park of Silicon Valley
Power, Guanlan, Longhua District, Shenzhen, China
深圳市龙华区观澜街道大富工业区硅谷动力智能终端产业园 A16 栋

400-613-1096 www.saramonic.com info@saramonic.com

产品介绍

枫笛Saramonic Vmic5 Pro是一款超心型枪式麦克风，提供广播级音质，支持单反，微单，摄像机等设备。Vmic5 Pro 自带输出增益控制（-10dB，0dB，+20dB），低切（平切/75/150 Hz），高频提升（+5db）等功能。麦克风具有自动电源开关功能，可根据外接设备电源状态开启/关闭。同时，麦克风还带有耳机监听孔，插入耳机可监控录制效果。特别设计的减震座系统，提供隔振功能和减少机械噪声。

内置电池容量2000mAh，支持USB-C（DC 5V/1A）充电。包装配置3.5mm TRS音频输出线，防风棉，防风毛，Type-C充电线。将Vmic5 Pro录制的声音传输到相机内。

特点

- 超心型拾音模式
- 电源自动同步功能
- 防震架
- 低切功能（平切/75/150 Hz）
- 输出增益控制 (-10dB, 0dB, +20dB)
- 高频提升（5dB）
- 耳机监听孔，3.5mm TRS音频输出孔，金属冷靴座结构
- 内置锂电池或直流电5V/1A供电
- 配置防风棉，防风毛，USB-C充电线，3.5mm TRS转TRS相机输出线

产品结构

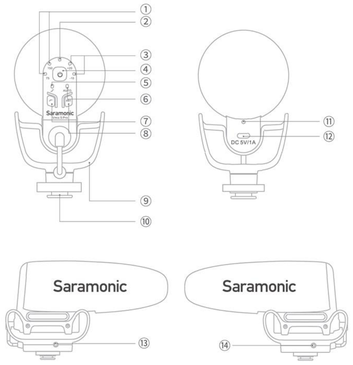

① 低切指示灯（平切/75/150Hz）
注意：当低切模式为平切时，指示灯熄灭

② 电源指示灯
设备开启=蓝灯常亮
低电量=红灯常亮

③ 输出增益指示灯 (-10dB, 0dB, +20dB)
增益设置为0dB时，增益指示灯熄灭。

④ 电源键

⑤ 高频提升指示灯

⑥ 自动模式指示灯

⑦ 低切过滤器按钮
短按设置低切大小
长按开启/关闭高频增益

⑧ 增益按钮
短按设置输出增益电平大小
长按开启/关闭高频提升功能

⑨ 防震架

⑩ 冷靴座

⑪ 充电指示灯
充电中=红灯亮
充满电=蓝灯亮

⑫ Type-C充电口

⑬ 耳机监听孔

⑭ 线性输出孔

快速操作指南

1. 长按电源键开启麦克风，电源LED灯亮蓝色。
2. 拧开麦克风底座的旋钮，将其安装至单反或其他设备。
3. 重新拧紧旋钮，固定好麦克风位置。
4. 将Vmic5 Pro固定在相机的冷靴座之后，请使用提供的3.5mm音频输出线，连接Vmic5 Pro的麦克风输出孔和您相机的麦克风输入孔。
5. 根据您的需要控制麦克风的音量。
0dB适合大多数场景，+20dB让你将相机的前置放大器调小，记录从远处拾音的效果。
6. 如果你的相机没有耳机监听孔，你可将耳机插入麦克风的耳机输出孔进行音频监听。我们也建议在正式录音前，先做个简短的录音测试，检查音频水平是否可以接受。
7. 在户外录音条件下，为保持录音清晰的效果，请给麦克风佩戴防风棉。
8. 录音结束后，长按电源键关闭麦克风。

充电

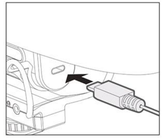

使用配套线材，连接至产品DC 5V/1A充电口；充电过程中，充电指示灯会呈红灯常亮状态；充满电后，充电指示灯呈蓝灯常亮，此时可直接拔出充电线。

技术参数

声学原理	电容
极性模式	超心型
频率响应	20－20,000Hz
灵敏度	-14±3dB(0dB=1V/Pa@1KHz)
信噪比	85dB
输出阻抗	200Ω
增益	-10dB, 0dB, +20dB
高通滤波器	0Hz, 75Hz, 150Hz
最大输出电平	7.5dBu(@1kHz, 1%THD into 1kΩ)
输出接口	3.5
最大声压级	130dBu
功率	3.7V/2000mAh(内置)
电池工作时间	120H
其他	高频提升；自动开关机；
尺寸	185*109*66mm
重量	185.5g